ME 102B Project Manual | Fully Automated Coffee Machine

By Junlong Li, Ivan Shao, Zelin Ye

Opportunity

The initial goal of this project is to create a relatively low-cost, smart drink-making appliance for everyday life. The machine is also designed to save time from operating machines and handles the simple repetitive actions when it comes to making customized drinks. There are products on the market that produce customizable beverages for customers, but they mostly remain in shopping malls and other public spaces, with the intention to attract nearby consumers. We looked to build a machine that is capable of making coffee, boba, etc. with a custom ratio of different ingredients at home, simply with a few touches with the fingers.

High Level Strategy

Our automatic coffee machine can be divided into two subsystems. There is a control panel section that allows the user to customize their inputs such as the ingredients ratio (with the option of less, normal, or more), which is controlled by the amount of time the solenoid stays open (will be mentioned later in the manual). We originally wanted to also incorporate water heating features as well, but did not find a way to build and incorporate into our controls in a timely manner.

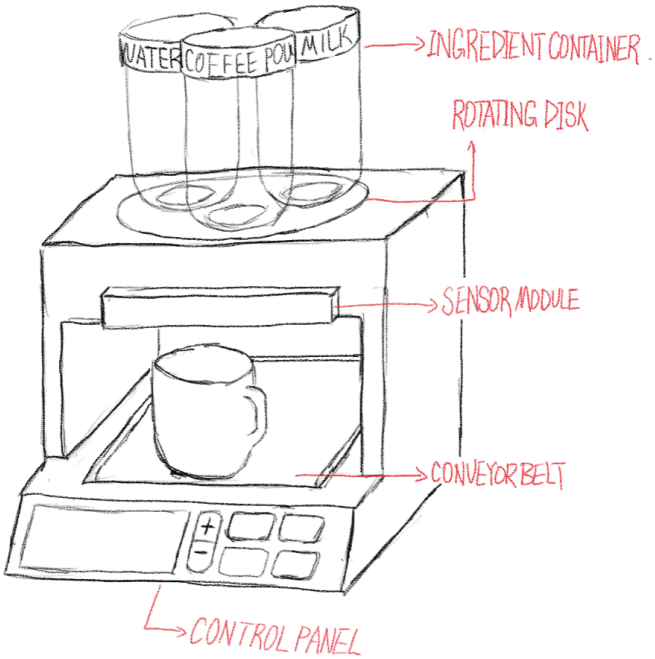

Figure 1. Proposed initial system-level

Once the user inputs all the necessary commands and press start, the operating section of the coffee machine will start to make coffee. The lower operating section contains a roller carriage and a platform where the cup will be placed. The platform carries a cup and moves along a straight T-rail, making stops at the proper positions to allow the ingredients to be dropped into the cup. moves across a T-rail.

There is a pressure or weight sensor under the cup holder. It can be used to sense if there is a cup on the platform (safety feature). The machine will not continue to operate at any given time when the cup is being removed during the process or drink making. In the upper operating section, there are three boxes that contain the powdered ingredients, and a tube that is connected to a water pump that delivers water to the cup after loading the ingredients. The only differences we had compared to our original design was that the ingredient boxes are in line instead of a rotating disc, and that ultrasonic sensors were not implemented as a safety feature due to compatibility issues with a version of the Arduino UNO board we tried to use.

We also hoped to use PWM to adjust the output voltage of a 12V motor to control its speed, since it is desired to move the platform at a slow and steady speed. But we realized the

specific motor required 1.5A of current in order to operate as it has really high torque, and wiring it to the rest of the circuit would have very concerning issues (a fried ESP32). Thus we had to go with a 6V motor that had just enough torque to operate at the speed we want without PWM.

Fully Integrated Device

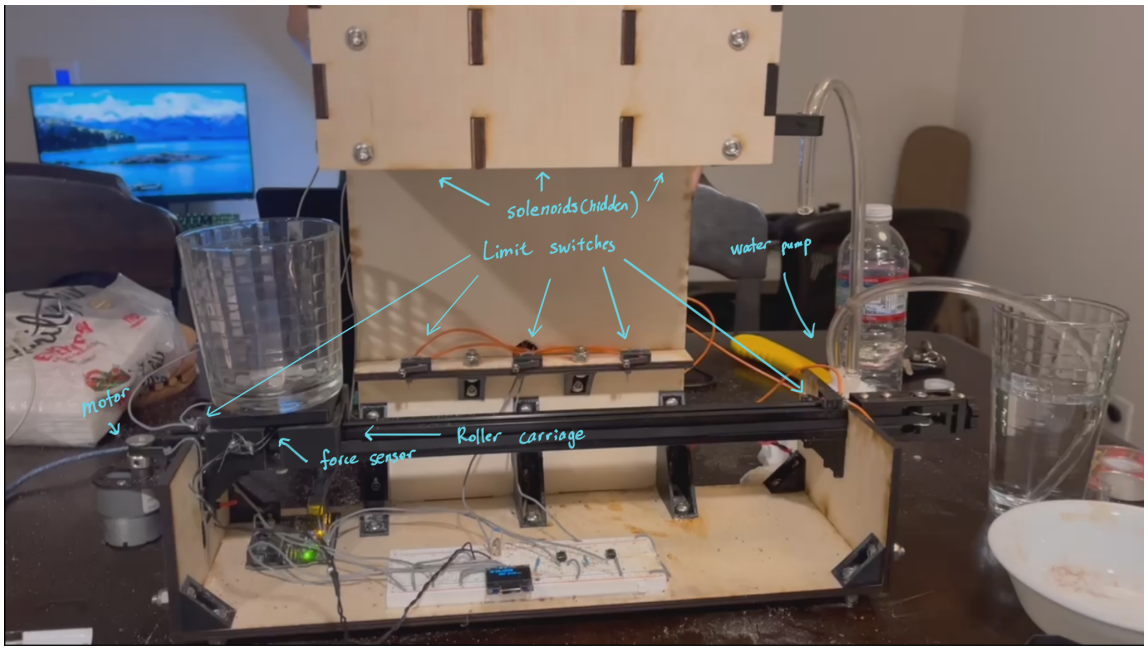

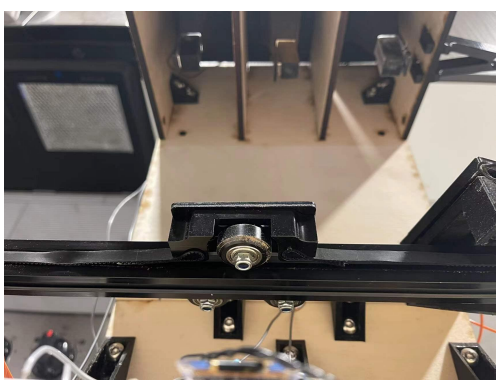

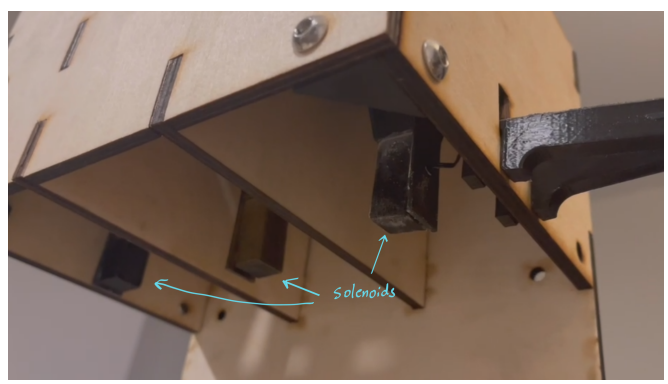

Roller Carriage and Solenoids

Function-Critical Decisions

The main component that drives the entire process of the machine is the motor. When deciding the proper motor, we had a ballpark estimation as follows:

Mass of mug/drink container + filled water + weight of roller carriage = 1.2 kg;

Static coefficient of friction for aluminum against rubber = 0.6

Weight of the physical system = $0.6 * 9.8 * 1.2 = 7.056N$

Minimum requirement of torque of a 6mm shaft diameter motor = $7.056 *.006 = 0.042Nm$

According to the data sheet of the motor we obtained, the torque at maximum efficiency at 6V is 1.5 kg*cm, which is 0.147 Nm, indicating that it is sufficient to drive the entire system.

Circuit and State Transition Diagram

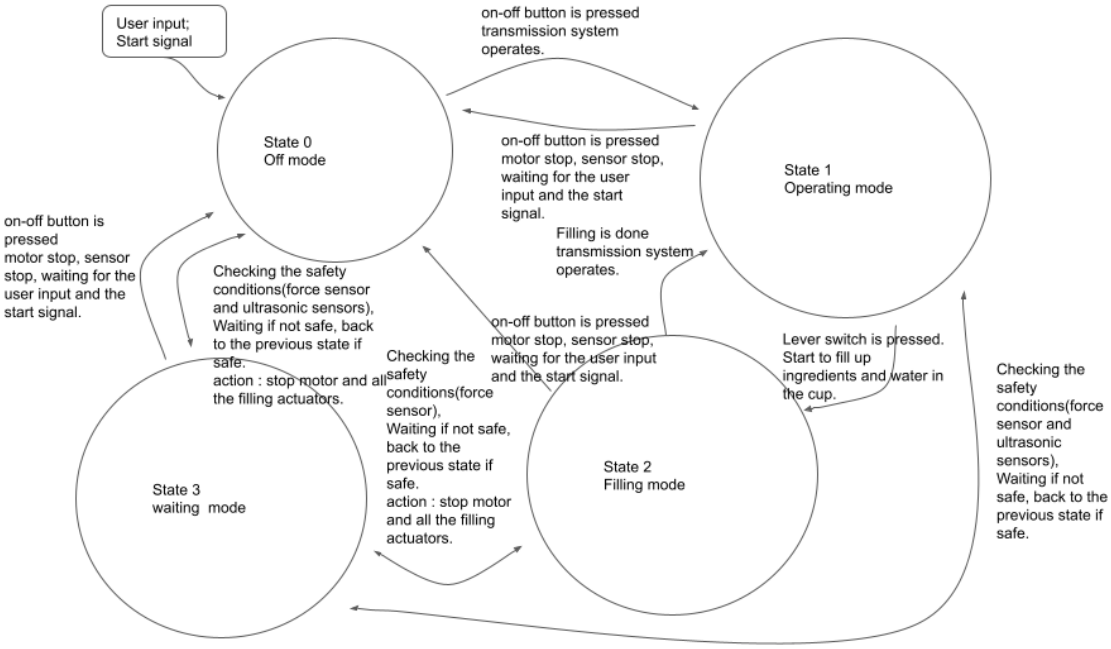

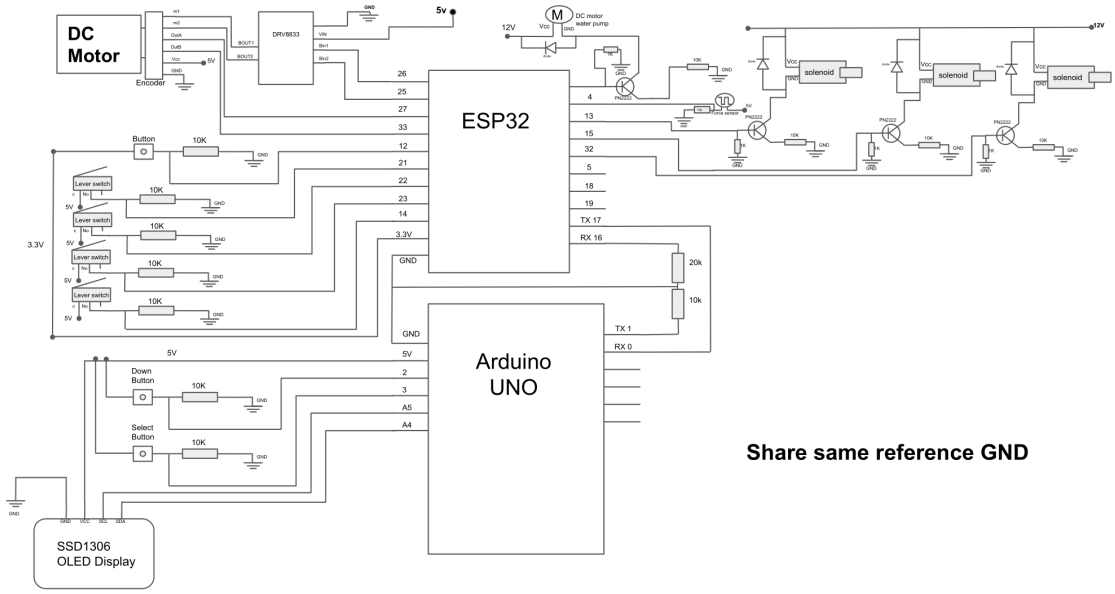

Reflection

In terms of group dynamics, we knew how to split the duties properly so that each person can do what they are best at, and we had great communication within the team for meeting small deadlines. What we want to improve on is the amount of time we spend on testing the system as there were many imperfections between the code and the actuators, and we had to make many small adjustments and spend some time debugging. Afterall, we managed to complete a working prototype, and look to expand its functionalities in the future.

Appendix A: Bill of Materials

Item Name	Purchase Justification	Price (ea.)	Quantity	Vendor	Link to Item
SNUG Fasteners SNG586 Fifty (50) 1/4-20 Stainless Steel Nylon Insert Hex Lock Nuts	Nuts for tightening laser cut parts together	$ 7.73	1	amazon	link
LC LICTOP Button Head Socket Cap Screws 1/4-20 3/4" Allen Hex 304 Stainless Steel Bolts 50 Pack	Screws for tightening laser cut parts together	$ 11.01	1	amazon	link
Zeberoxyz Big V Wheel with Plate and 6mm Belt Buckle for 2020V-Slot Aluminum Profile 3D Printer Accessories Parts Set for CNC Kossel Black Wheel (Big V-Wheels with Belt	Cart for 80-20 track	$ 20.50	1	amazon	link
20Sets Black 2020 Series Aluminum Profile Connector Set, 20pcs Corner Bracket, 40pcs T Nuts and Hex Screw Bolt for Slot 6mm 20S Aluminum Rail Accessor	Connector for the 80-20 rail	$ 24.22	1	amazon	link
Iverntech 4pcs 500mm 2020 V Type Black European Standard Anodized Linear Rail Aluminum Profile Extrusion for DIY 3D Printer and CNC Machine	80-20 rail used for cart that transport the platform	$ 33.06	1	amazon	link
Befenybay Upgrade 2020 Profile X-axis Synchronous Belt Stretch Straighten Tensioner for Creality Ender-3/Ender3 Pro/Ender3 V2/CR-10/ CR-10 V2/ CR-10 V	Tensioner to ensure transmission belt runs smoothly	$ 15.42	1	amazon	link
PLA 3D Printer Filament, SUNLU PLA Filament 1.75mm, Dimensional Accuracy +/- 0.02 mm, 1 kg Spool, 1.75mm, PLA Black	3D print material for all 3D printed parts	$ 23.14	1	amazon	link
1 of: E-outstanding Synchronous Wheel 2PCS Silver 20 Teeth 6.35mm Bore Timing Pulley GT2 Aluminium Alloy Synchronous Wheel for 6mm Width Belt 3D Printer CNC Mechanical	TIming belt pulley for the transmission	$ 6.16	1	amazon	link
1 of: 6V/12V DC 3.5 - 150 RPM High Torque Gear Box Motor Reducer Reversible	High torque motor to drive transmission that has high friction	$ 9.90	1	Ebay	link
1 of: 5PCS DC 12V 4mm Stroke Mini Push-Pull Type Solenoid Micro DC Solenoid Electromagnet Electric Magnet Valve Open Frame Spring Solenoid Valves Linear Mot	Solenoid is used in actuating the valves of the ingredients container	$ 13.54	1	amazon	link

1 of: 12V 2A Power Supply AC Adapter, AC 100-240V to DC 12 Volt Transformers, 2.1mm X 5.5mm Wall Plug (12 Volt - 2 amp - 2 pack)	Power supply for solenoid and high torque motor which use 12V power supply	$ 14.32	1	amazon	link
1 of: 5PCS DC 12V 4mm Stroke Mini Push-Pull Type Solenoid Micro DC Solenoid Electromagnet Electric Magnet Valve Open Frame Spring Solenoid Valves Linear Mot	Solenoid is used in actuating the valves of the ingredients container	$ 13.54	1	amazon	link
1 of: 2Pcs Thin Film Pressure Sensor High Precise Force-Sensitive Resistor Force Sensor Pressure Sensor Resistance-type Thin Film Pressure Sensor, Force Sen	Force sensor for the platform that sense the cup placement	$ 12.23	1	amazon	https://www.amazon.com/gp/product/B07T1CHY58/ref=ppx_yo_dt_b_asin_image_o02_s00?ie=UTF8&psc=1
1 of: MUZHI SPDT1NO 1NC Momentary Hinge Metal Roller Lever Micro Switch AC 5A 125 250V 3 Pins 12 Pcs	Lever switch that is used in position the platform	$ 7.32	1	amazon	https://www.amazon.com/gp/product/B07MW3W79B/ref=ppx_yo_dt_b_asin_image_o03_s00?ie=UTF8&th=1
1 of: Frienda 2 Pieces 0.96 Inch Display Module 12864 128x64 Driver IIC I2C Serial Self-Luminous Display Board Compatible with Raspberry PI (Blue Light)	Display for user interface	$ 8.37	1	amazon	https://www.amazon.com/dp/B08TTDW72N?ref=ppx_yo2_dt_b_product_details&th=1

Appendix B: CAD

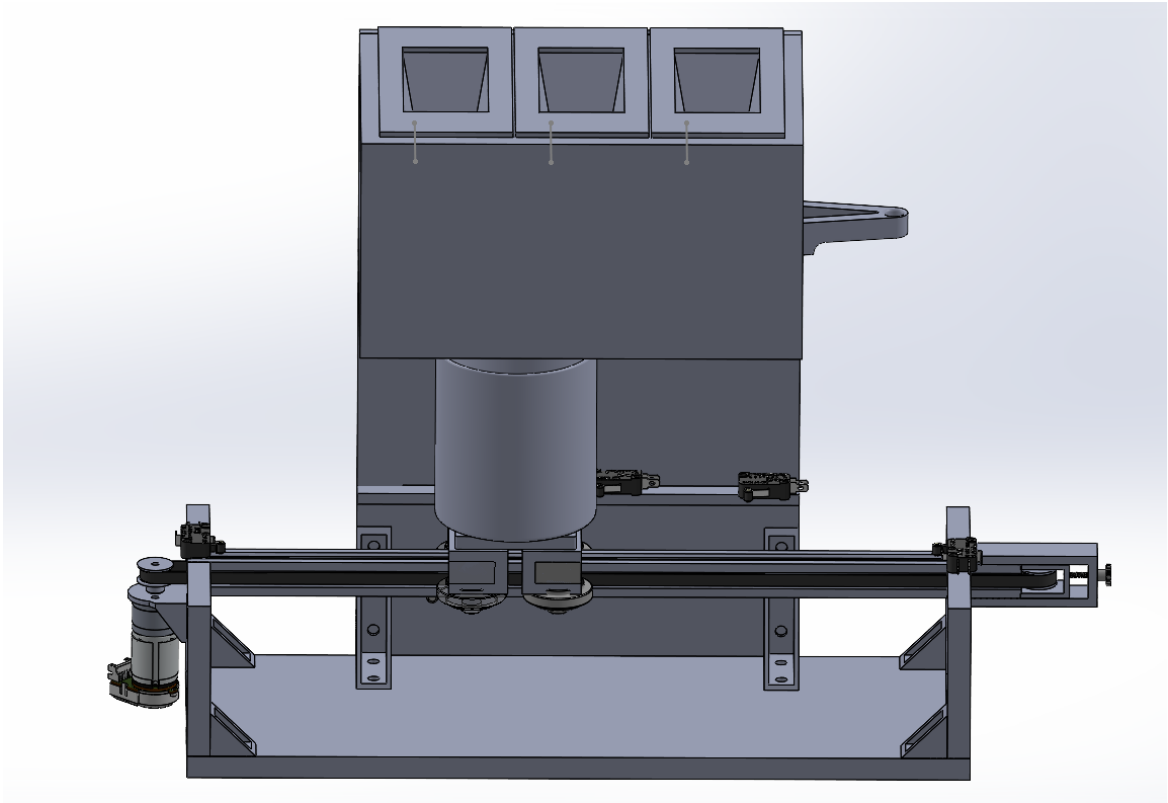

Front View of the Machine

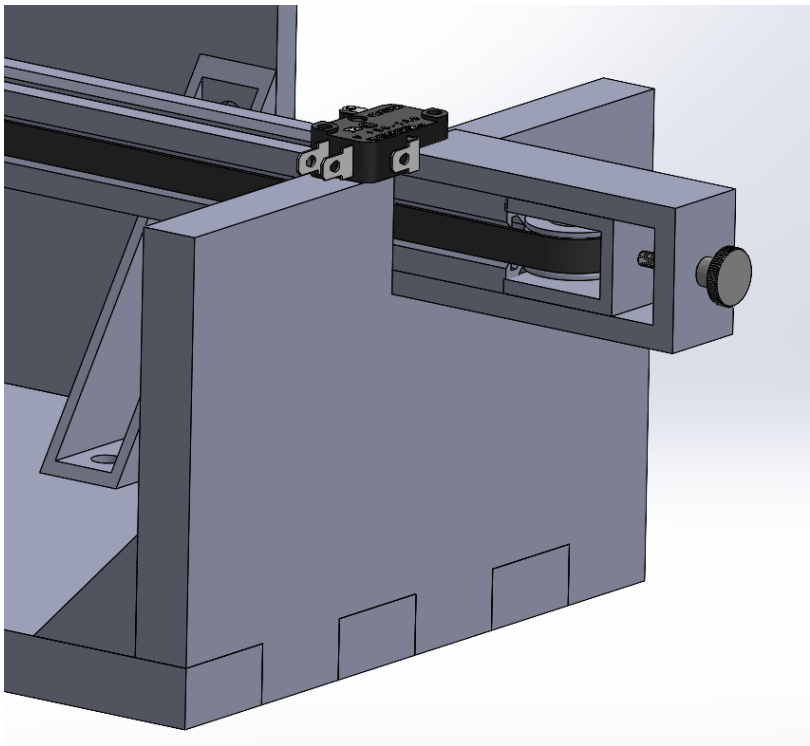

The Conveyor Belt, Limit Switch, and Tensioner

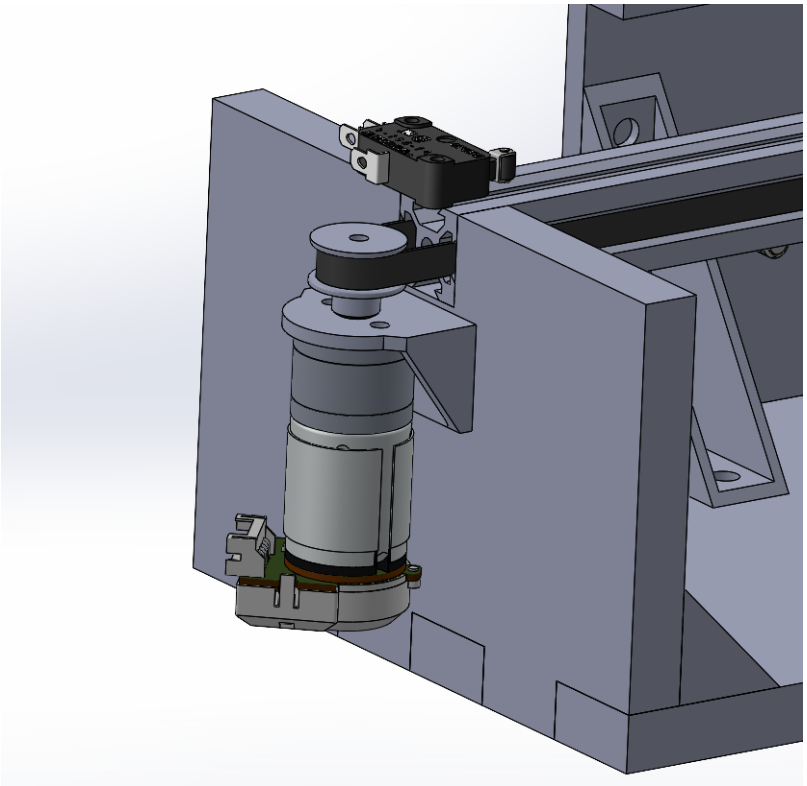

The Motor

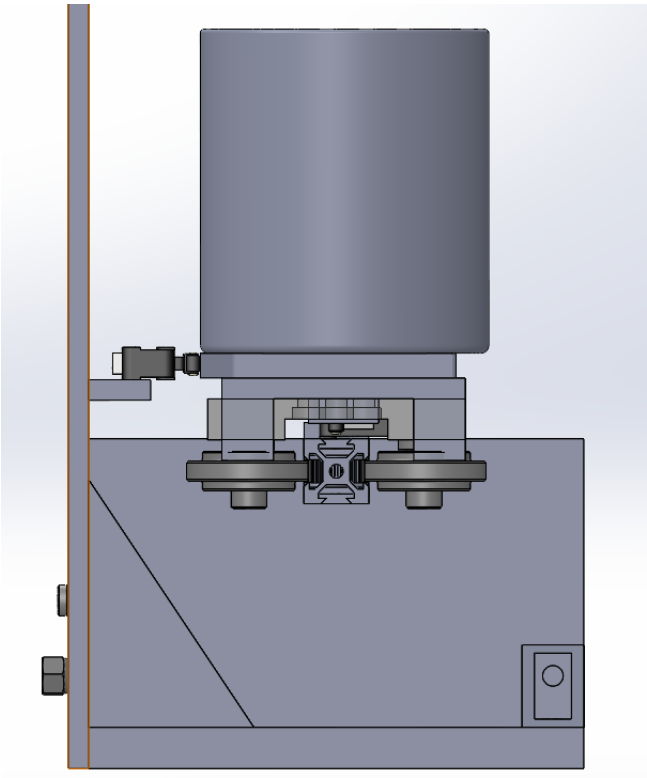

Cross-Section View of the Rolling System

Appendix C: Screenshot of code

Cal_Mixer | Arduino 1.8.16 (Windows Store 1.8.51.0)

File Edit Sketch Tools Help

Cal_Mixer §

```
#include <ESP32Encoder.h>
#define PUMP 14
#define BIN_1 26
#define BIN_2 25
#define BTN 12
#define FSRAnalogPin 4
#define Lever_Switch_Start 21
#define Lever_Switch_End 13
#define Lever_Switch_Pin1  33
#define Lever_Switch_Pin2  27
#define Lever_Switch_Pin3 15
//#define Lever_Switch_cover 5
#define MOTOR 32
#define RXD2 16
#define TXD2 17
#define SOLENOID1 19
#define SOLENOID2 18
#define SOLENOID3 5

ESP32Encoder encoder;
int FSRreading = 0;
int previous_state = -1;
int ingradient_times[3] = {0,0,0};
int spot=0;
int omegaSpeed = 0;
int omegaDes = 0;
int D = 0;
int error = 0;
float kv = 0.12;
int Kp = 10;
float Ki = 0.1;
byte state = 0;
int sum_e = 0;
int safe_dis = 10;
volatile bool on_off = false; //for motor
volatile bool ingradient_switch_onOroff= false;
int waterFillingCounter = 5;
```

```
Writing at 0x00008000... (100 %)
Wrote 3072 bytes (128 compressed) at 0x00008000 in 0.0 seconds (effective 3510.9 kbit/s)...
Hash of data verified.
```

478

ESP32 Dev Module, Disabled, Default 4MB with spiffs (1.2MB APP/1.5MB SPIFFS), 240MHz (WiFi/BT), QIO, 80MHz, 4MB (32Mb), 921600, None on COM10

Type here to search

EN 45°F ENG 9:02 PM 12/10/2021

Cal_Mixer | Arduino 1.8.16 (Windows Store 1.8.51.0)

File Edit Sketch Tools Help

Cal_Mixer §

```
int waterFillingCounter = 5;
//Setup interrupt variables ----------------------------
volatile int count = 0; // encoder count
volatile bool interruptCounter = false;    // check timer interrupt 1
volatile bool deltaT = false;     // check timer interrupt 2
volatile bool is_1s_time = false; // check timer interrupt 3
int totalInterrupts = 0;   // counts the number of triggering of the alarm
hw_timer_t * timer0 = NULL;
hw_timer_t * timer1 = NULL;
hw_timer_t * timer2 = NULL;
portMUX_TYPE timerMux0 = portMUX_INITIALIZER_UNLOCKED;
portMUX_TYPE timerMux1 = portMUX_INITIALIZER_UNLOCKED;
portMUX_TYPE timerMux2 = portMUX_INITIALIZER_UNLOCKED;
volatile bool buttonIsPressed = false;
volatile bool pressSwitch1 = false;
volatile bool pressSwitch2 = false;
volatile bool pressSwitch3 = false;
volatile bool pressSwitchStart = false;
volatile bool pressSwitchEnd = false;
// setting PWM properties ---------------------------
const int freq = 5000;
const int ledChannel_1 = 1;
const int ledChannel_2 = 2;
const int resolution = 8;
const int MAX_PWM_VOLTAGE = 255;
const int NOM_PWM_VOLTAGE = 200;
//Initialization -----------------------------------
void IRAM_ATTR onTime0() {
  portENTER_CRITICAL_ISR(&timerMux0);
  interruptCounter = true; // the function to be called when timer interrupt is triggered
  portEXIT_CRITICAL_ISR(&timerMux0);
}

void IRAM_ATTR onTime1() {
  portENTER_CRITICAL_ISR(&timerMux1);
  //count = encoder.getCount( );
  //encoder.clearCount ( );
```

```
Writing at 0x00008000... (100 %)
Wrote 3072 bytes (128 compressed) at 0x00008000 in 0.0 seconds (effective 3510.9 kbit/s)...
Hash of data verified.
```

55 ESP32 Dev Module, Disabled, Default 4MB with spiffs (1.2MB APP/1.5MB SPIFFS), 240MHz (WiFi/BT), QIO, 80MHz, 4MB (32Mb), 921600, None on COM10

Type here to search EN 45°F ENG 9:02 PM 12/10/2021

Cal_Mixer | Arduino 1.8.16 (Windows Store 1.8.51.0)

File Edit Sketch Tools Help

Cal_Mixer §

```
  //encoder.clearCount ( );
  deltaT = true; // the function to be called when timer interrupt is triggered
  portEXIT_CRITICAL_ISR(&timerMux1);
}
void IRAM_ATTR onTime2() {
  portENTER_CRITICAL_ISR(&timerMux2);
  is_1s_time = true; // the function to be called when timer interrupt is triggered
  portEXIT_CRITICAL_ISR(&timerMux2);
}
void IRAM_ATTR isr_press_switch1() {  // the function to be called when interrupt is triggered
    pressSwitch1 = true;
}
void IRAM_ATTR isr_press_switch2() {  // the function to be called when interrupt is triggered
    pressSwitch2 = true;
}
void IRAM_ATTR isr_press_switch3() {  // the function to be called when interrupt is triggered
    pressSwitch3 = true;
}
void IRAM_ATTR isr_button() {  // the function to be called when interrupt is triggered
    buttonIsPressed = true;
}
void IRAM_ATTR isr_press_Switch_Start() {  // the function to be called when interrupt is triggered
    pressSwitchStart  = true;
}
void IRAM_ATTR isr_press_Switch_End() {  // the function to be called when interrupt is triggered
    pressSwitchEnd = true;
}
/*void IRAM_ATTR isr_press_Switch_cover() {  // the function to be called when interrupt is triggered
    pressSwitchCover = true;
}*/

void setup() {
  // put your setup code here, to run once:
  pinMode(BTN, INPUT); // configures the specified pin to behave either as an input or an output
  pinMode(FSRAnalogPin, INPUT);
  pinMode(Lever_Switch_Pin1, INPUT);
  pinMode(Lever_Switch_Pin2, INPUT);
```

```
Writing at 0x00008000... (100 %)
Wrote 3072 bytes (128 compressed) at 0x00008000 in 0.0 seconds (effective 3510.9 kbit/s)...
Hash of data verified.
```

55 ESP32 Dev Module, Disabled, Default 4MB with spiffs (1.2MB APP/1.5MB SPIFFS), 240MHz (WiFi/BT), QIO, 80MHz, 4MB (32Mb), 921600, None on COM10

Type here to search EN 45°F ENG 9:02 PM 12/10/2021

Cal_Mixer | Arduino 1.8.16 (Windows Store 1.8.51.0)

File Edit Sketch Tools Help

Cal_Mixer §

```
  pinMode(Lever_Switch_Pin3, INPUT);
  pinMode(Lever_Switch_Start, INPUT);
  pinMode(Lever_Switch_End, INPUT);
  //pinMode(Lever_Switch_cover, INPUT);
  pinMode(PUMP,OUTPUT);
  pinMode(MOTOR,OUTPUT);
  pinMode(SOLENOID1,OUTPUT);
  pinMode(SOLENOID2,OUTPUT);
  pinMode(SOLENOID3,OUTPUT);
  attachInterrupt(BTN, isr_button, RISING);
  attachInterrupt(Lever_Switch_Pin1, isr_press_switch1, RISING);
  attachInterrupt(Lever_Switch_Pin2, isr_press_switch2, RISING);
  attachInterrupt(Lever_Switch_Pin3, isr_press_switch3, RISING);
  attachInterrupt(Lever_Switch_Start, isr_press_Switch_Start, RISING);
  attachInterrupt(Lever_Switch_End, isr_press_Switch_End, RISING);
  //attachInterrupt(Lever_Switch_cover, isr_press_Switch_cover, HIGH);

  Serial.begin(115200);
  Serial2.begin(9600,SERIAL_8N1,RXD2,TXD2);
  /*ESP32Encoder::useInternalWeakPullResistors = UP; // Enable the weak pull up resistors
  encoder.attachHalfQuad(33, 27); // Attache pins for use as encoder pins
  encoder.setCount(0);  // set starting count value after attaching
*/
  // configure LED PWM functionalitites
  ledcSetup(ledChannel_1, freq, resolution);
  ledcSetup(ledChannel_2, freq, resolution);

  // attach the channel to the GPIO to be controlled
  ledcAttachPin(BIN_1, ledChannel_1);
  ledcAttachPin(BIN_2, ledChannel_2);

  // initilize timer
  timer0 = timerBegin(0, 80, true);  // timer 0, MWDT clock period = 12.5 ns * TIMGn_Tx_WDT_CLK_PRESCALE -> 12.5 ns * 80 -> 1000 ns = 1 us, countUp
  timerAttachInterrupt(timer0, &onTime0, true); // edge (not level) triggered
  timerAlarmWrite(timer0, 100000, true); // 2000000 * 1 us = 0.1 s, autoreload true

  timer1 = timerBegin(1, 80, true);  // timer 1, MWDT clock period = 12.5 ns * TIMGn_Tx_WDT_CLK_PRESCALE -> 12.5 ns * 80 -> 1000 ns = 1 us, countUp
```

```
Writing at 0x00008000... (100 %)
Wrote 3072 bytes (128 compressed) at 0x00008000 in 0.0 seconds (effective 3510.9 kbit/s)...
Hash of data verified.
```

55 ESP32 Dev Module, Disabled, Default 4MB with spiffs (1.2MB APP/1.5MB SPIFFS), 240MHz (WiFi/BT), QIO, 80MHz, 4MB (32Mb), 921600, None on COM10

Type here to search EN 45°F ENG 9:02 PM 12/10/2021

Cal_Mixer | Arduino 1.8.16 (Windows Store 1.8.51.0)

File Edit Sketch Tools Help

Cal_Mixer §

```
  timerAttachInterrupt(timer1, &onTime1, true); // edge (not level) triggered
  timerAlarmWrite(timer1, 100, true);

  timer2 = timerBegin(2, 80, true);  // timer 1, MWDT clock period = 12.5 ns * TIMGn_Tx_WDT_CLK_PRESCALE -> 12.5 ns * 80 -> 1000 ns = 1 us, countUp
  timerAttachInterrupt(timer2, &onTime2, true); // edge (not level) triggered
  timerAlarmWrite(timer2, 1000000, true); // 10000 * 1 us = 10 ms, autoreload true
  // at least enable the timer alarms
  timerAlarmEnable(timer0); // enable
  timerAlarmEnable(timer1); // enable
  timerAlarmEnable(timer2); // enable

}

void loop() {
    String a = Serial2.readString();
    Serial.print(a);
  // distance = distance_detect();
  switch (state) {
    case 0 : // off_mode
    pressSwitchEvent5();
    digitalWrite(PUMP,LOW);
    Serial.println("00000");
    digitalWrite(SOLENOID1,LOW);
    digitalWrite(SOLENOID2,LOW);
    digitalWrite(SOLENOID3,LOW);
    pressSwitch1 = false;
    pressSwitch2 = false;
    pressSwitch3 = false;
    pressSwitchEnd = false;
    stopMotorResponse();
    if (a.toInt() > 0 && a.toInt() <9000 ){
        ingradient_times[0] = (a.toInt()/100);
        ingradient_times[1] =((a.toInt()/10)%10)+5;
        ingradient_times[2] = (a.toInt()%10);
  }
        Disable_FSR();
      if (buttonPressEvent()) {
```

```
Writing at 0x00008000... (100 %)
Wrote 3072 bytes (128 compressed) at 0x00008000 in 0.0 seconds (effective 3510.9 kbit/s)...
Hash of data verified.
```

55 ESP32 Dev Module, Disabled, Default 4MB with spiffs (1.2MB APP/1.5MB SPIFFS), 240MHz (WiFi/BT), QIO, 80MHz, 4MB (32Mb), 921600, None on COM10

Type here to search EN 45°F ENG 9:02 PM 12/10/2021

Cal_Mixer | Arduino 1.8.16 (Windows Store 1.8.51.0)

File Edit Sketch Tools Help

Cal_Mixer §

```
    if (buttonPressEvent()) {
      previous_state = state;
      state = 1;
    }
    break;
  case 1 : // Operating mode
  pressSwitchEvent5();
    Serial.println("11111");
    digitalWrite(PUMP,LOW);
    digitalWrite(SOLENOID1,LOW);
    digitalWrite(SOLENOID2,LOW);
    digitalWrite(SOLENOID3,LOW);
    Serial.println(ingradient_times[0]);
    Serial.println(ingradient_times[1]);
    Serial.println(ingradient_times[2]);
    enable_FSR;
    if (deltaT) {
      //on_off = !on_off;
      portENTER_CRITICAL(&timerMux1);
      deltaT = false;
      portEXIT_CRITICAL(&timerMux1);
      D = NOM_PWM_VOLTAGE;
      previous_state = state;
      safty_response();
    }
    startMotorResponse();
     if (buttonPressEvent()) {
      stopMotorResponse();
      state = 0;
    }
    if(pressSwitchEvent1()){
        stopMotorResponse();
        spot = 0;
        state = 2;
        Serial.println("1 press");
        ingradient_switch_onOroff = false;
        }
```

```
Writing at 0x00008000... (100 %)
Wrote 3072 bytes (128 compressed) at 0x00008000 in 0.0 seconds (effective 3510.9 kbit/s)...
Hash of data verified.
```

203 ESP32 Dev Module, Disabled, Default 4MB with spiffs (1.2MB APP/1.5MB SPIFFS), 240MHz (WiFi/BT), QIO, 80MHz, 4MB (32Mb), 921600, None on COM10

Type here to search

EN 45°F ENG 9:03 PM 12/10/2021

Cal_Mixer | Arduino 1.8.16 (Windows Store 1.8.51.0)

File Edit Sketch Tools Help

Cal_Mixer §

```
      }
    if(pressSwitchEvent2()){
        stopMotorResponse();
        spot = 1;
        state = 2;
        Serial.println("2 press");
        ingradient_switch_onOroff = false;
      }
   if(pressSwitchEvent3()){
        stopMotorResponse();
        spot = 2;
        state = 2;
        Serial.println("3 press");
        ingradient_switch_onOroff = false;
      }
    if (pressSwitchEvent4()){
      state = 4;
      inverseMotorResponse();
      delay(100);
      stopMotorResponse();
    }
      break;

    case 2 : // Filling up
    stopMotorResponse();
    Serial.println("22222");
    digitalWrite(PUMP,LOW);
    if (buttonPressEvent()) {
      state = 0;
      stopMotorResponse();
    }
    if(is_ls_time)
    {
      portENTER_CRITICAL(&timerMux2);
      is_ls_time = false;
      portEXIT_CRITICAL(&timerMux2);
      if(spot!=3){
```

```
Writing at 0x00008000... (100 %)
Wrote 3072 bytes (128 compressed) at 0x00008000 in 0.0 seconds (effective 3510.9 kbit/s)...
Hash of data verified.
```

203 ESP32 Dev Module, Disabled, Default 4MB with spiffs (1.2MB APP/1.5MB SPIFFS), 240MHz (WiFi/BT), QIO, 80MHz, 4MB (32Mb), 921600, None on COM10

Type here to search EN 45°F ENG 9:03 PM 12/10/2021

Cal_Mixer | Arduino 1.8.16 (Windows Store 1.8.51.0)

File Edit Sketch Tools Help

Cal_Mixer §

```
      if(spot!=3){
      ingradient_switch_onOroff= !ingradient_switch_onOroff;
      //FillUpSmallTank(spot,ingradient_switch_onOroff);
      FillUpCup(spot, ingradient_switch_onOroff);
      Serial.println(spot);
      ingradient_times[spot]=ingradient_times[spot]-1;
      Serial.println(ingradient_times[spot]);
      if(ingradient_times[spot]<0){
        state = 1;
        Serial.println("Now back to 1");
      }
    }
    }
    if (deltaT) {
      //on_off = !on_off;
      portENTER_CRITICAL(&timerMux1);
      deltaT = false;
      portEXIT_CRITICAL(&timerMux1);
      previous_state = state;
      safty_response();
  }
  break;
  case 3 : // waiting State
  pressSwitchEvent5();
  Serial.println("33333");
  digitalWrite(PUMP,LOW);
  if (buttonPressEvent()) {
      state = 0;
    }
  stopMotorResponse();
  //digitalWrite(green_led,LOW);// test purpose;
  //digitalWrite(yellow_led,LOW);// test purpose;
  digitalWrite(SOLENOID1, LOW);
  digitalWrite(SOLENOID2, LOW);
  digitalWrite(SOLENOID3, LOW);
  if (deltaT) {
      //on_off = !on_off;
```

```
Writing at 0x00008000... (100 %)
Wrote 3072 bytes (128 compressed) at 0x00008000 in 0.0 seconds (effective 3510.9 kbit/s)...
Hash of data verified.
```

203 ESP32 Dev Module, Disabled, Default 4MB with spiffs (1.2MB APP/1.5MB SPIFFS), 240MHz (WiFi/BT), QIO, 80MHz, 4MB (32Mb), 921600, None on COM10

Type here to search EN 45°F ENG 9:03 PM 12/10/2021

Cal_Mixer | Arduino 1.8.16 (Windows Store 1.8.51.0)

File Edit Sketch Tools Help

Cal_Mixer §

```
        portENTER_CRITICAL(&timerMux1);
        deltaT = false;
        portEXIT_CRITICAL(&timerMux1);
        safty_response();
    }
    break;
    case 4 :
      digitalWrite(SOLENOID1, LOW);
      digitalWrite(SOLENOID2, LOW);
      digitalWrite(SOLENOID3, LOW);
      Serial.println("44444");
      if(waterFillingCounter>=0){
      stopMotorResponse();
      FillWater();
      waterFillingCounter-=1;
      Serial.println("waterFillingCounter");
      Serial.println(waterFillingCounter);
      }
      if(waterFillingCounter<0){
          digitalWrite(PUMP,LOW);
          if(forceEvent()){
            Serial.println("back to Start");
            inverseMotorResponse();
          }
        }
        if(pressSwitchEvent5()){
            state = 0;
            waterFillingCounter=5;
        }
    break;
    default: // should not happen
      Serial.println("SM_ERROR");
      break;
}
}
//Event Checkers
bool buttonPressEvent() {
```

```
Writing at 0x00008000... (100 %)
Wrote 3072 bytes (128 compressed) at 0x00008000 in 0.0 seconds (effective 3510.9 kbit/s)...
Hash of data verified.
```

203 ESP32 Dev Module, Disabled, Default 4MB with spiffs (1.2MB APP/1.5MB SPIFFS), 240MHz (WiFi/BT), QIO, 80MHz, 4MB (32Mb), 921600, None on COM10

Type here to search EN 45°F ENG 9:03 PM 12/10/2021

Cal_Mixer | Arduino 1.8.16 (Windows Store 1.8.51.0)

File Edit Sketch Tools Help

Cal_Mixer §

```
bool buttonPressEvent() {
  if (buttonIsPressed == true){
    buttonIsPressed = false;
    return true;
  }
  else {
    return false;
  }
}
bool pressSwitchEvent1() {
  if (pressSwitch1 == true){
    pressSwitch1 = false;
    return true;
  }
   else {
    return false;
  }
}
bool pressSwitchEvent2() {
  if (pressSwitch2 == true){
    pressSwitch2 = false;
    return true;
  }
   else {
    return false;
  }
}
bool pressSwitchEvent3() {
  if (pressSwitch3 == true){
    pressSwitch3 = false;
    return true;
  }
   else {
    return false;
  }
}
bool pressSwitchEvent4() {
```

```
Writing at 0x00008000... (100 %)
Wrote 3072 bytes (128 compressed) at 0x00008000 in 0.0 seconds (effective 3510.9 kbit/s)...
Hash of data verified.
```

203 ESP32 Dev Module, Disabled, Default 4MB with spiffs (1.2MB APP/1.5MB SPIFFS), 240MHz (WiFi/BT), QIO, 80MHz, 4MB (32Mb), 921600, None on COM10

Type here to search EN 45°F ENG 9:03 PM 12/10/2021

Cal_Mixer | Arduino 1.8.16 (Windows Store 1.8.51.0)

File Edit Sketch Tools Help

Cal_Mixer §

```
bool pressSwitchEvent4() {
  if (pressSwitchEnd == true){
    pressSwitchEnd = false;
    return true;
  }
   else {
    return false;
  }
}
bool pressSwitchEvent5() {
  if (pressSwitchStart == true){
    Serial.println("Start Switch being press");
    pressSwitchStart = false;
    return true;
  }
   else {
    return false;
  }
}
bool forceEvent(){// if no cup return true
  if(analogRead(FSRAnalogPin)< 200/*4095 is max analog output*/){
    return true;
  }
  else{
    return false;
  }
}
//Event Service Responses
void safty_response(){

    Serial.println("force:" + String(analogRead(FSRAnalogPin)));
    if(forceEvent()){
      Serial.println("my previous state:");
      Serial.print(previous_state);
      state = 3;
    }
    else if (!forceEvent()&& state == 3){
```

```
Writing at 0x00008000... (100 %)
Wrote 3072 bytes (128 compressed) at 0x00008000 in 0.0 seconds (effective 3510.9 kbit/s)...
Hash of data verified.
```

203 ESP32 Dev Module, Disabled, Default 4MB with spiffs (1.2MB APP/1.5MB SPIFFS), 240MHz (WiFi/BT), QIO, 80MHz, 4MB (32Mb), 921600, None on COM10

Type here to search EN 45°F ENG 9:03 PM 12/10/2021

Cal_Mixer | Arduino 1.8.16 (Windows Store 1.8.51.0)

File Edit Sketch Tools Help

Cal_Mixer §

```
    if(spot == 0){
    digitalWrite(SOLENOID1,LOW);// test purpose;
    }
    else if(spot == 1)
    {
    digitalWrite(SOLENOID2,LOW);// test purpose;
    }
    else if(spot == 2)
    {
    digitalWrite(SOLENOID3,LOW);// test purpose;
    }
    //digitalWrite(ingradient_switch_down[spot], LOW); //open the TOP switch
  }
  else{
    if(spot == 0){
    digitalWrite(SOLENOID1,HIGH);// test purpose;
    }
    else if(spot == 1)
    {
    digitalWrite(SOLENOID2,HIGH);// test purpose;
    }
    else if(spot == 2)
    {
    digitalWrite(SOLENOID3,HIGH);// test purpose;
    }
   //digitalWrite(ingradient_switch_down[spot], HIGH);
  }
}
void FillWater(){
  digitalWrite(PUMP,HIGH);
}
void enable_FSR(){
  digitalWrite(FSRAnalogPin,HIGH);
}
void Disable_FSR(){
  digitalWrite(FSRAnalogPin,LOW);
}
```

```
Writing at 0x00008000... (100 %)
Wrote 3072 bytes (128 compressed) at 0x00008000 in 0.0 seconds (effective 3510.9 kbit/s)...
Hash of data verified.
```

203 ESP32 Dev Module, Disabled, Default 4MB with spiffs (1.2MB APP/1.5MB SPIFFS), 240MHz (WiFi/BT), QIO, 80MHz, 4MB (32Mb), 921600, None on COM10

Type here to search EN 45°F ENG 9:03 PM 12/10/2021

Cal_Mixer | Arduino 1.8.16 (Windows Store 1.8.51.0)

File Edit Sketch Tools Help

Cal_Mixer §

```
    }
    else if (!forceEvent()&& state == 3){
      state = previous_state;

    }
}
void stopMotorResponse() {
    ledcWrite(ledChannel_1, LOW);
  ledcWrite(ledChannel_2, LOW);
}

void startMotorResponse() {
  ledcWrite(ledChannel_1, LOW);
  ledcWrite(ledChannel_2, 193);
}
void inverseMotorResponse() {
  ledcWrite(ledChannel_1, 193);
  ledcWrite(ledChannel_2, LOW);
}
void FillUpCup(int spot, bool onOroff){
  if(!onOroff){
    if(spot == 0){
    digitalWrite(SOLENOID1,LOW);// test purpose;
    }
    else if(spot == 1)
    {
    digitalWrite(SOLENOID2,LOW);// test purpose;
    }
    else if(spot == 2)
    {
    digitalWrite(SOLENOID3,LOW);// test purpose;
    }
    //digitalWrite(ingradient_switch_down[spot], LOW); //open the TOP switch
  }
  else{
    if(spot == 0){
    digitalWrite(SOLENOID1,HIGH);// test purpose;
```

```
Writing at 0x00008000... (100 %)
Wrote 3072 bytes (128 compressed) at 0x00008000 in 0.0 seconds (effective 3510.9 kbit/s)...
Hash of data verified.
```

203 ESP32 Dev Module, Disabled, Default 4MB with spiffs (1.2MB APP/1.5MB SPIFFS), 240MHz (WiFi/BT), QIO, 80MHz, 4MB (32Mb), 921600, None on COM10

Type here to search EN 45°F ENG 9:03 PM 12/10/2021

Arduino Uno code(Menu)

Calmixer_menu | Arduino 1.8.16 (Windows Store 1.8.51.0)

File Edit Sketch Tools Help

Calmixer_menu §

```
#include <SPI.h>
#include <Wire.h>
#include <Adafruit_GFX.h>
#include <Adafruit_SSD1306.h>
#define OLED_ADDR   0x3C
#define SCREEN_WIDTH 128 // OLED display width, in pixels
#define SCREEN_HEIGHT 64 // OLED display height, in pixels
//-----------------------------------------------------------
#define OLED_RESET     -1 // Reset pin # (or -1 if sharing Arduino reset pin)
#define SCREEN_ADDRESS 0x3C ///< See datasheet for Address; 0x3D for 128x64, 0x3C for 128x32
Adafruit_SSD1306 display(SCREEN_WIDTH, SCREEN_HEIGHT, &Wire, OLED_RESET);

#define Down_BTN 2
#define Select_BTN 3
volatile bool buttonDownIsPressed = false;
volatile bool buttonSelectIsPressed = false;
volatile bool Stop = false;
String grade[3] = {"Less", "Normal", "More"};
int number_grade[3] = {2,2,2};
int selectLimit = 5;
int page = 0;
int option = 0;
int menuCount = 1;
volatile bool becomeBlack = false;

void setup() {
  // put your setup code here, to run once:
  Serial.begin(9600);
  pinMode(Down_BTN, INPUT);
  pinMode(Select_BTN, INPUT);
  attachInterrupt(digitalPinToInterrupt(Down_BTN), isr_down,RISING);
  attachInterrupt(digitalPinToInterrupt(Select_BTN), isr_select,RISING);
  display.begin(SSD1306_SWITCHCAPVCC, OLED_ADDR);
  display.display();
  display.clearDisplay();
}
void loop() {
```

390 ESP32 Dev Module, Disabled, Default 4MB with spiffs (1.2MB APP/1.5MB SPIFFS), 240MHz (WiFi/BT), QIO, 80MHz, 4MB (32Mb), 921600, None on COM10

Type here to search

EN 45°F ENG 9:11 PM 12/10/2021

Calmixer_menu | Arduino 1.8.16 (Windows Store 1.8.51.0)

File Edit Sketch Tools Help

Calmixer_menu §

```
void loop() {
   switch (page) {
    case 0 : // main page
      menuCheck_main();
      staticMenu_page1();
       break;
    case 1 : // page for default
      menuCheck_default();
      staticMenu_page_default();
      break;
    case 2 : // page for customize
      menuCheck_customize();
      staticMenu_page_customize();
      break;
    case 3: // sub-menu in customize sugar
      menuCheck_submenu();
      staticMenu_page_submenuInCustomize();
      break;
    case 4: // .... coffee
      menuCheck_submenu();
      staticMenu_page_submenuInCustomize();
      break;
    case 5: // .... cafemate
      menuCheck_submenu();
      staticMenu_page_submenuInCustomize();
      break;
      case 6: //  passed start signal
      waitForYourCoffee();
      break;
    default: // should not happen
    Serial.println("SM_ERROR");
    break;
   }
    display.clearDisplay();
    delay(100);
}
```

390 ESP32 Dev Module, Disabled, Default 4MB with spiffs (1.2MB APP/1.5MB SPIFFS), 240MHz (WiFi/BT), QIO, 80MHz, 4MB (32Mb), 921600, None on COM10

Type here to search

EN 45°F ENG 9:11 PM 12/10/2021

Calmixer_menu | Arduino 1.8.16 (Windows Store 1.8.51.0)

File Edit Sketch Tools Help

Calmixer_menu §

```
void isr_down() {  // the function to be called when interrupt is triggered
    buttonDownIsPressed = true;
}
void isr_select() {  // the function to be called when interrupt is triggered
    buttonSelectIsPressed = true;
}
void waitForYourCoffee() {
  display.setTextSize(1);
  if(!becomeBlack){
  display.setTextColor(WHITE);
  }
  else{
    display.setTextColor(BLACK);
    becomeBlack = false;
  }
  display.setCursor(2, 0);
  display.println("We are making");
  display.setCursor(32, 20);
  display.println("your drink...");
  display.display();
}

void staticMenu_page1() {
  display.setTextSize(2);
  if(!becomeBlack){
  display.setTextColor(WHITE);
  }
  else{
    display.setTextColor(BLACK);
    becomeBlack = false;
  }
  display.setCursor(10, 0);
  display.println("CalMixer");
  //---------------------------------
  display.setTextSize(1);
  display.setCursor(10, 20);
```

390 ESP32 Dev Module, Disabled, Default 4MB with spiffs (1.2MB APP/1.5MB SPIFFS), 240MHz (WiFi/BT), QIO, 80MHz, 4MB (32Mb), 921600, None on COM10

Type here to search

EN 45°F ENG 9:11 PM 12/10/2021

Calmixer_menu | Arduino 1.8.16 (Windows Store 1.8.51.0)

File Edit Sketch Tools Help

Calmixer_menu §

```
  display.setCursor(10, 30);
  display.println("Customize");

  display.setCursor(10, 40);
  display.println("Ready!");

  display.setCursor(2, (menuCount * 10) + 10);
  display.println(">");

  display.display();
}
void staticMenu_page_default() {
  display.setTextSize(1);
  if(!becomeBlack){
  display.setTextColor(WHITE);
  }
  else{
    display.setTextColor(BLACK);
    becomeBlack = false;
  }
  display.setCursor(10, 0);
  display.println("Suger:");
  display.setCursor(55, 0);
  display.println(grade[number_grade[0]-1]);
  //---------------------------------
  display.setTextSize(1);
  display.setCursor(10, 10);
  display.println("Coffee:");
  display.setCursor(60, 10);
  display.println(grade[number_grade[1]-1]);
  //---------------------------------
  display.setCursor(10, 20);
  display.println("Cafemate:");
  display.setCursor(65, 20);
  display.println(grade[number_grade[2]-1]);
```

390 ESP32 Dev Module, Disabled, Default 4MB with spiffs (1.2MB APP/1.5MB SPIFFS), 240MHz (WiFi/BT), QIO, 80MHz, 4MB (32Mb), 921600, None on COM10

Type here to search

EN 45°F ENG 9:11 PM 12/10/2021

Calmixer_menu | Arduino 1.8.16 (Windows Store 1.8.51.0)

File Edit Sketch Tools Help

Calmixer_menu §

```
  display.setCursor(10, 30);
  display.println("Back");

  display.setCursor(2, (menuCount * 10)-10);
  display.println(">");

  display.display();
}

void staticMenu_page_customize() {
  display.setTextSize(1);
  if(!becomeBlack){
  display.setTextColor(WHITE);
  }
  else{
    display.setTextColor(BLACK);
    becomeBlack = false;
  }
  display.setCursor(10, 0);
  display.println("Suger");
  //---------------------------------
  display.setTextSize(1);
  display.setCursor(10, 10);
  display.println("Coffee");
  //---------------------------------
  display.setCursor(10, 20);
  display.println("Cafemate");

  display.setCursor(10, 30);
  display.println("Back");

  display.setCursor(2, (menuCount * 10)-10);
  display.println(">");

  display.display();
}
```

390 ESP32 Dev Module, Disabled, Default 4MB with spiffs (1.2MB APP/1.5MB SPIFFS), 240MHz (WiFi/BT), QIO, 80MHz, 4MB (32Mb), 921600, None on COM10

Type here to search EN 45°F ENG 9:12 PM 12/10/2021

Calmixer_menu | Arduino 1.8.16 (Windows Store 1.8.51.0)

File Edit Sketch Tools Help

Calmixer_menu §

```
void staticMenu_page_submenuInCustomize() {
  display.setTextSize(1);
  if(!becomeBlack){
  display.setTextColor(WHITE);
  }
  else{
    display.setTextColor(BLACK);
    becomeBlack = false;
  }
  display.setCursor(10, 0);
  display.println("Less");
  //---------------------------------
  display.setTextSize(1);
  display.setCursor(10, 10);
  display.println("Normal");
  //---------------------------------
  display.setCursor(10, 20);
  display.println("More");

  display.setCursor(10, 30);
  display.println("Back");

  display.setCursor(2, (menuCount * 10) -10 );
  display.println(">");

  display.display();
}
//-------------------------------------------------------
void menuCheck_main() {
  if (buttonDownPressEvent() && menuCount < 4) {
    menuCount++;
  }
  if (menuCount >= 4) {
     menuCount = 1;
  }
  if(menuCount == 1){
```

390 ESP32 Dev Module, Disabled, Default 4MB with spiffs (1.2MB APP/1.5MB SPIFFS), 240MHz (WiFi/BT), QIO, 80MHz, 4MB (32Mb), 921600, None on COM10

Type here to search EN 45°F ENG 9:12 PM 12/10/2021

Calmixer_menu | Arduino 1.8.16 (Windows Store 1.8.51.0)

File Edit Sketch Tools Help

Calmixer_menu §

```
  if(menuCount == 1){
  if (buttonSelectPressEvent())
  {
          page = 1;
          menuCount = 1;
          becomeBlack = true;
  }
  }
  if(menuCount == 2){
    if(buttonSelectPressEvent()){
          page = 2;
          menuCount = 1;
          becomeBlack = true;
      }
}
  if( menuCount == 3){
  if (buttonSelectPressEvent()){
        int num = number_grade[0]*100+ number_grade[1]*10 + number_grade[2];
       Serial.println(num);
       page = 6;
       becomeBlack = true;
      }
  }
}
//-----------------------------------------------------------------

void menuCheck_default() {
  if (buttonDownPressEvent() && menuCount <= 4) {
    menuCount++;
  }
  if (menuCount >4) {

    menuCount = 1;
  }
  if (buttonSelectPressEvent() && menuCount == 4)
  {
          page = 0;
```

390 ESP32 Dev Module, Disabled, Default 4MB with spiffs (1.2MB APP/1.5MB SPIFFS), 240MHz (WiFi/BT), QIO, 80MHz, 4MB (32Mb), 921600, None on COM10

Type here to search EN 45°F ENG 9:12 PM 12/10/2021

Calmixer_menu | Arduino 1.8.16 (Windows Store 1.8.51.0)

File Edit Sketch Tools Help

Calmixer_menu §

```
          page = 0;
          option =0 ;
          menuCount = 1;
          becomeBlack = true;
    }
}
//-----------------------------------------------------------
void menuCheck_customize() {
  if (buttonDownPressEvent() && menuCount < 5) {
    menuCount++;
  }
  if (menuCount >= 5) {
    menuCount = 1;
  }
  if(menuCount == 1){
  if (buttonSelectPressEvent())
  {
          page = 3;
          menuCount = 1;
          becomeBlack = true;
  }
  }
  if(menuCount == 2){
    if(buttonSelectPressEvent()){
          page = 4;
          menuCount = 1;
          becomeBlack = true;
      }
}
  if( menuCount == 3){
  if (buttonSelectPressEvent()){
          page = 5;
          menuCount = 1;
          becomeBlack = true;
      }
  }
  if (menuCount == 4){
```

390 ESP32 Dev Module, Disabled, Default 4MB with spiffs (1.2MB APP/1.5MB SPIFFS), 240MHz (WiFi/BT), QIO, 80MHz, 4MB (32Mb), 921600, None on COM10

Type here to search EN 45°F ENG 9:12 PM 12/10/2021

Calmixer_menu | Arduino 1.8.16 (Windows Store 1.8.51.0)

File Edit Sketch Tools Help

Calmixer_menu §

```
  if (menuCount == 4){
    if(buttonSelectPressEvent()){
          page = 0;
          menuCount = 1;
          becomeBlack = true;
      }
}
}
//-------------------------------------------------------------
//-------------------------------------------------------------
void menuCheck_submenu(){
  if (buttonDownPressEvent() && menuCount <5) {
    menuCount++;
  }
  if (menuCount >=5) {
    menuCount = 1;
  }
  if (page == 3 && menuCount == 1){
    if (buttonSelectPressEvent()){
          number_grade[0] = 1;
          page = 2;
          menuCount = 1;
          becomeBlack = true;
   }
  }
  if (page == 3 && menuCount == 2){
    if(buttonSelectPressEvent()){
          number_grade[0] = 2;
          page = 2;
          menuCount = 1;
          becomeBlack = true;
      }
  }
  if (page == 3 && menuCount == 3){
    if(buttonSelectPressEvent()){
          number_grade[0] = 3;
          page = 2;
```

390 ESP32 Dev Module, Disabled, Default 4MB with spiffs (1.2MB APP/1.5MB SPIFFS), 240MHz (WiFi/BT), QIO, 80MHz, 4MB (32Mb), 921600, None on COM10

Type here to search

EN 45°F ENG 9:12 PM 12/10/2021

Calmixer_menu | Arduino 1.8.16 (Windows Store 1.8.51.0)

File Edit Sketch Tools Help

Calmixer_menu §

```
          page = 2;
          menuCount = 1;
          becomeBlack = true;
      }
  }

  if (page == 4 && menuCount == 1){
    if (buttonSelectPressEvent()){
          number_grade[1] = 1;
          page = 2;
          menuCount = 1;
          becomeBlack = true;
   }
  }
    if (page == 4 && menuCount == 2){
    if(buttonSelectPressEvent()){
          number_grade[1] = 2;
          page = 2;
          menuCount = 1;
          becomeBlack = true;
      }
  }
    if (page == 4 && menuCount == 3){
    if(buttonSelectPressEvent()){
          number_grade[1] = 3;
          page = 2;
          menuCount = 1;
          becomeBlack = true;
      }
  }
  if (page == 5 && menuCount == 1){
    if (buttonSelectPressEvent()){
          number_grade[2] = 1;
          page = 2;
          menuCount = 1;
          becomeBlack = true;
   }
```

390 ESP32 Dev Module, Disabled, Default 4MB with spiffs (1.2MB APP/1.5MB SPIFFS), 240MHz (WiFi/BT), QIO, 80MHz, 4MB (32Mb), 921600, None on COM10

Type here to search

EN 45°F ENG 9:12 PM 12/10/2021

Calmixer_menu | Arduino 1.8.16 (Windows Store 1.8.51.0)

File Edit Sketch Tools Help

Calmixer_menu §

```
          becomeBlack = true;
      }
  }
  if (page == 5 && menuCount == 1){
    if (buttonSelectPressEvent()){
          number_grade[2] = 1;
          page = 2;
          menuCount = 1;
          becomeBlack = true;
   }
  }
  if (page == 5 && menuCount == 2){
    if(buttonSelectPressEvent()){
          number_grade[2] = 2;
          page = 2;
          menuCount = 1;
          becomeBlack = true;
      }
  }
  if (page == 5 && menuCount == 3){
    if(buttonSelectPressEvent()){
          number_grade[2] = 3;
          page = 2;
          menuCount = 1;
          becomeBlack = true;
      }
  }
    if (menuCount == 4){
    if(buttonSelectPressEvent()){
          page = 2;
          menuCount = 1;
          becomeBlack = true;
    }
  }
}
//-----------------------------------------------------------------------
//Event Checkers
```

390 ESP32 Dev Module, Disabled, Default 4MB with spiffs (1.2MB APP/1.5MB SPIFFS), 240MHz (WiFi/BT), QIO, 80MHz, 4MB (32Mb), 921600, None on COM10

Type here to search EN 45°F ENG 9:12 PM 12/10/2021

Calmixer_menu | Arduino 1.8.16 (Windows Store 1.8.51.0)

File Edit Sketch Tools Help

Calmixer_menu §

```
  if (page == 5 && menuCount == 3){
    if(buttonSelectPressEvent()){
          number_grade[2] = 3;
          page = 2;
          menuCount = 1;
          becomeBlack = true;
      }
  }
    if (menuCount == 4){
    if(buttonSelectPressEvent()){
          page = 2;
          menuCount = 1;
          becomeBlack = true;
    }
  }
}
//-----------------------------------------------------------------------
//Event Checkers
bool buttonDownPressEvent() {
  if (buttonDownIsPressed == true){
    buttonDownIsPressed = false;
    return true;
  }
  else {
    return false;
  }
}
bool buttonSelectPressEvent() {
  if (buttonSelectIsPressed == true){
    buttonSelectIsPressed = false;
    //Serial.println("---------select press------------");
    return true;
  }
  else {
    return false;
  }
}
```

390 ESP32 Dev Module, Disabled, Default 4MB with spiffs (1.2MB APP/1.5MB SPIFFS), 240MHz (WiFi/BT), QIO, 80MHz, 4MB (32Mb), 921600, None on COM10

Type here to search EN 45°F ENG 9:12 PM 12/10/2021